Dylan Thornburg and Chris Phan

SANTA CLARA UNIVERSITY	ELEN 115 Spring 2024	Shoba Krishnan
Laboratory #4: Diode Basics		

I. OBJECTIVES

• To study the diode i-v curve, and compare the characteristics to a piecewise linear model. • To study the characteristics and performance of an LED

• To study diode applications, simulate them to verify operation and analyze performance.

III. LAB PROCEDURE

Section A: Simulations

1) IV curve of a diode:

(i) Pick the diode 1N4148 from the library.

(ii) Connect a DC voltage source across the diode.

(iii)Run a DC sweep of the source voltage from -2V to 2V and measure the current through the diode.

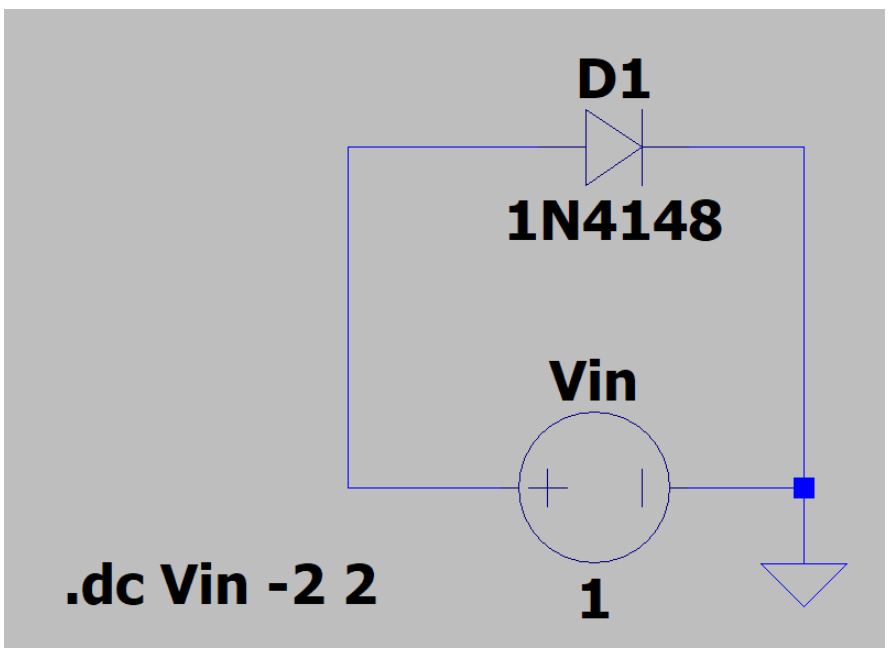

Schematic of the diode D1 connected to a voltage source for a DC sweep analysis.

(iv)Plot the i-v curve of the diode and make observations of when it turns “ON”.

X axis: Volts

Y axis: Amps

This is current vs voltage of our Diode

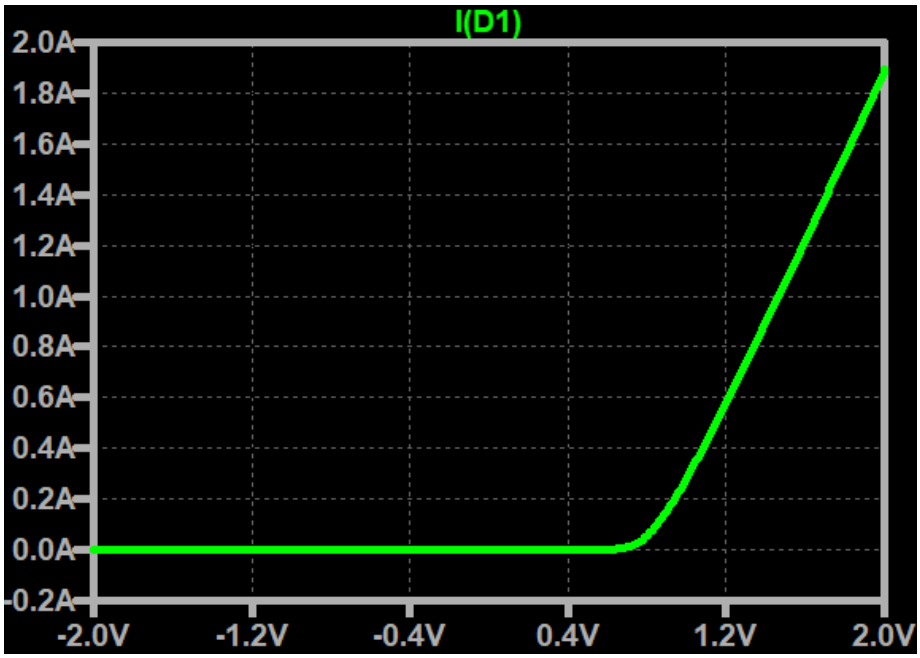

The i-v curve of the diode D1. The horizontal axis is the diode's voltage and the vertical axis is the diode's current.

When the diode turns on, the voltage is above the turn on voltage (Vdo), which is around .7V.

TA Check Point: Complete Part 1 and show your TA that the library component is working correctly.

2) <u>Piecewise linear (PWL) model of a diode:</u>

(i) Create a piecewise linear model for the 1N4148 diode as shown in Figure 1. Indicate the V_{D0} = 0.7V and r_D = 5ohms. Create the circuit using a voltage source, resistor, and an ideal diode as in the figure below.

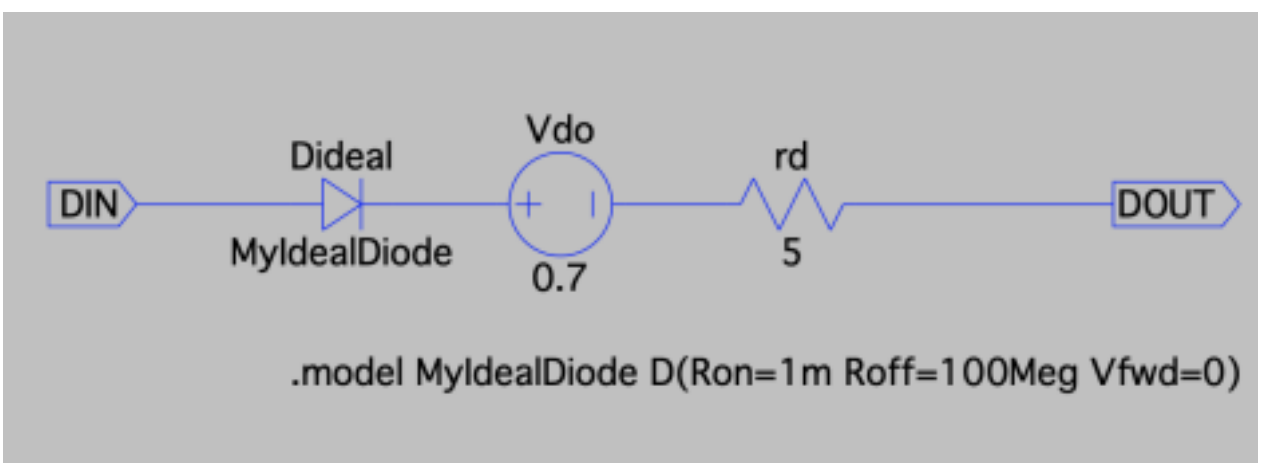

Figure 1For the diode model use the below script.

```
.model MydealDiode D(Ron=1m Roff=100Meg Vfwd=0)
```

(ii) Connect a DC source to this diode model.

(iii)Run a DC sweep of the source voltage from -2V to 2V and measure the current through the diode model.

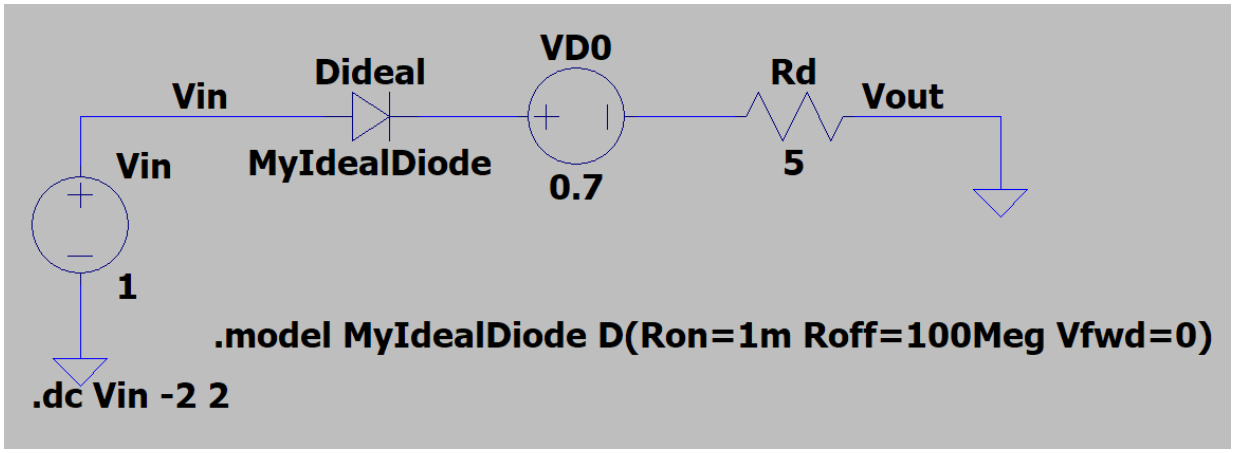

Schematic of a diode transformed into a piecewise linear model and connected to a voltage source

(iv)Plot the i-v curve of the diode model. Overlay this curve on the 1N4148 i-v curve.

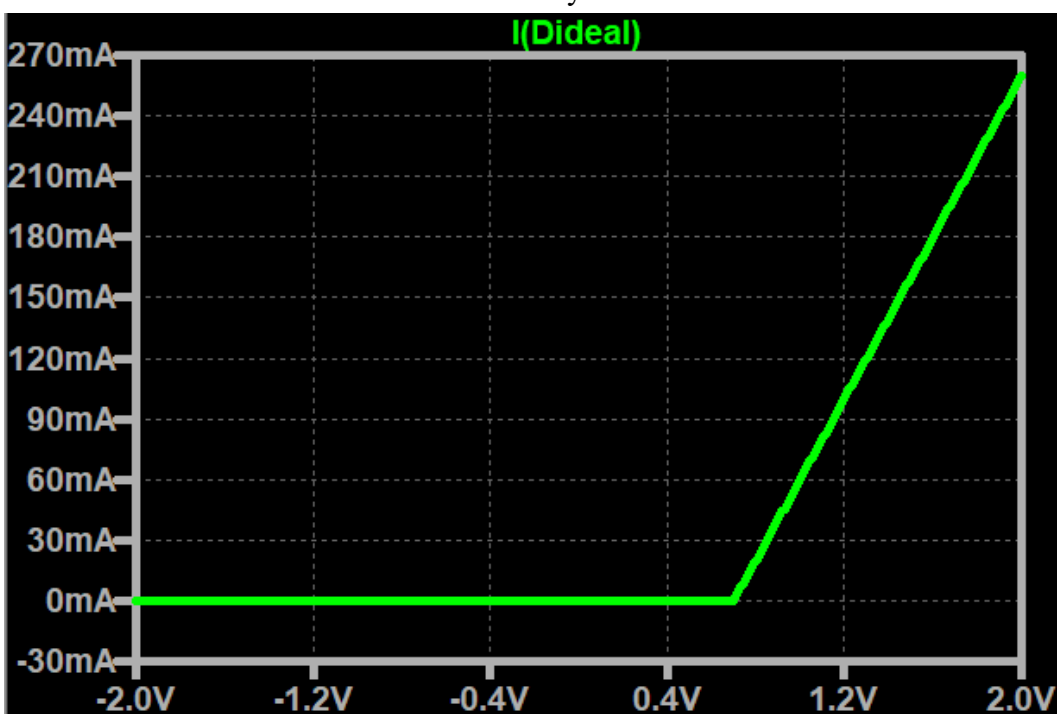

The i-v curve of the piecewise linear model of our diode. The horizontal axis is the diode's voltage and the vertical axis is the diode's current.

(v) Is the PWL model a good representation of the actual diode? Explain your answer.
No, because the graph's scale is significantly smaller. More specifically, the current across the PWL model only went up to roughly 260mA when the current through the original 1N4148 model went up to about 1.9A.

(vi)Change the parameters V_{D0} and r_D to see how to get closer to the actual i-v curve of

the 1N4148 diode. Note these new values.

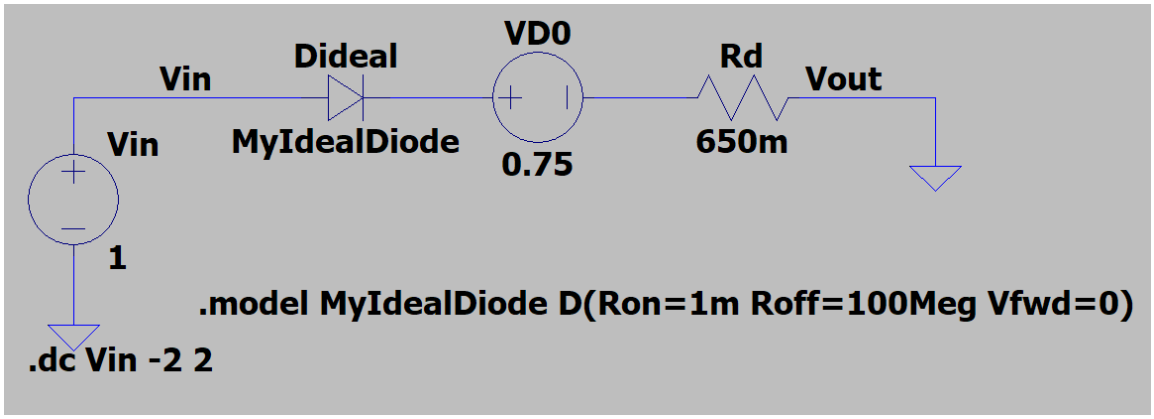

Schematic with new values for the piecewise linear model.

New values: V_{D0} = 0.75V, R_D = 0.65Ω

After we change the values, it becomes a much better model.

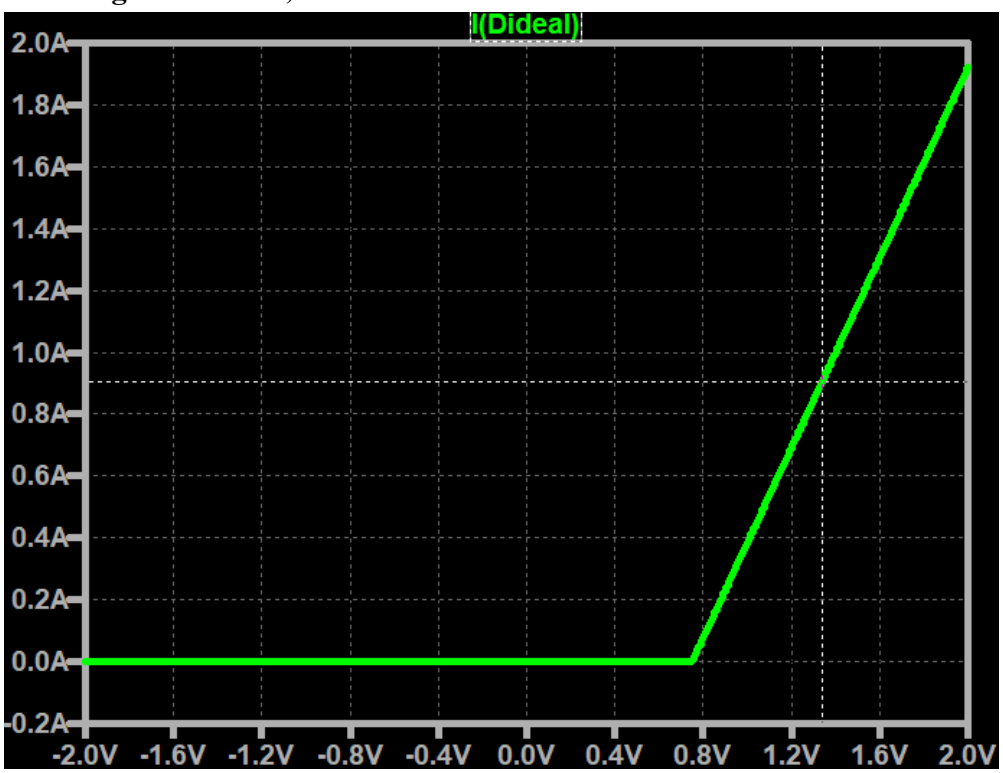

The i-v curve of our new piecewise linear model.

TA Check Point: Complete Part 2 and show your TA that the PWL model matches the 1N4148 i-v curve.

3) Diode Clamp Application

(i) Draw the circuit in Figure 2 with the transmission line replaced by an RLC circuit shown below. **DO NOT place the clamping diodes yet**

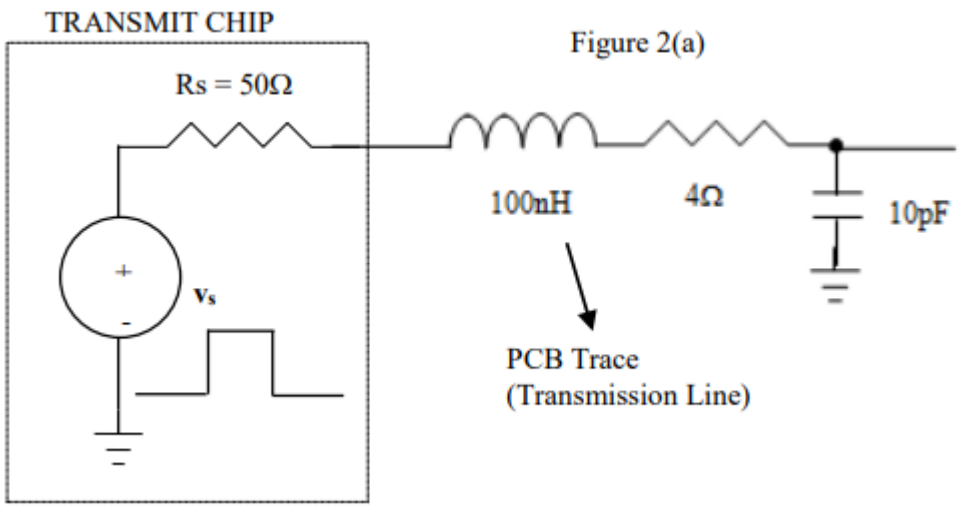

Figure 2(a)

(ii) Give a square wave with duty cycle of 5% and voltage range 0 to 3.3 V and frequency 1kHz to this wire. Run simulations for 2ms with rise time 10ps and fall time 10ps.

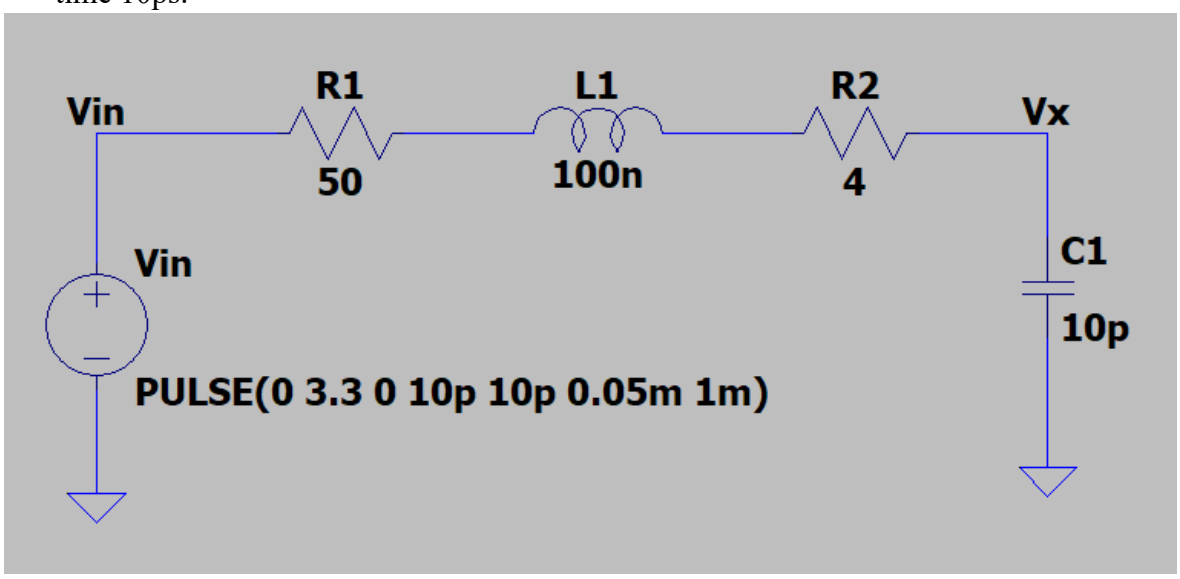

Schematic of the RLC circuit with the specified voltage source. The 1kHz frequency implies a 1ms period and 5% duty cycle means the square wave is on (3.3V) for 5% of the period (or 0.05ms).

(iii)Plot the input and output on one plot and explain the output signal you observe.
We see the output has overshoot when compared to the input. This is because of the behavior of the inductor and capacitor.

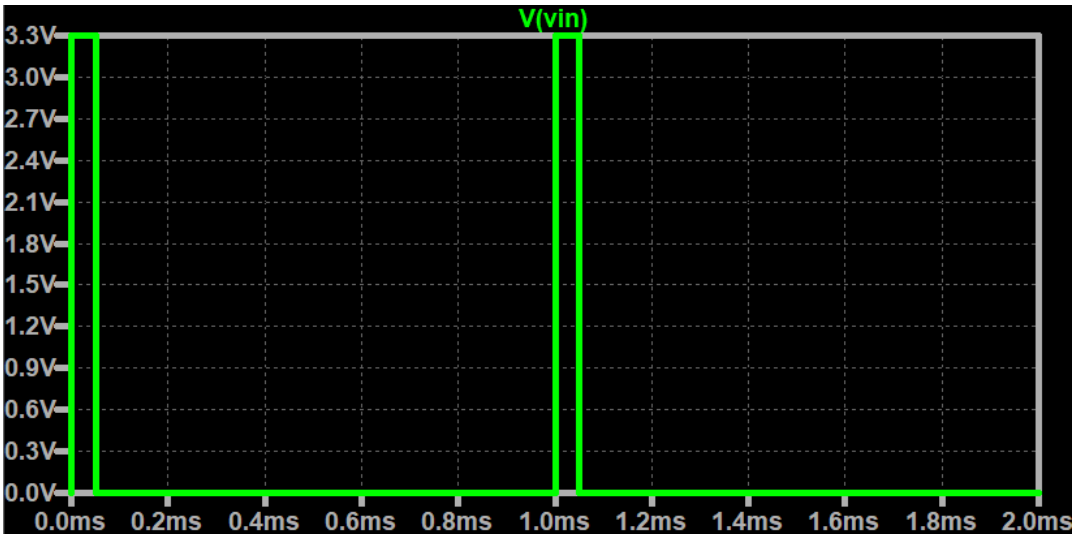

Input Vin as a function of time.

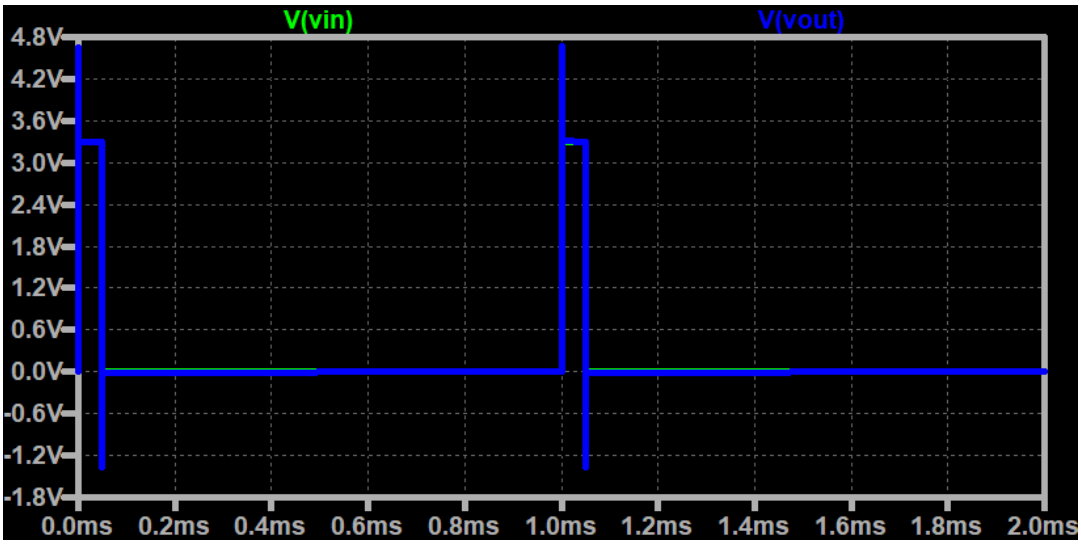

Input and output plotted as functions of time. Green is input and blue is output. The output nearly overlapped with the input, which is why we have a separate plot for the input.

The output looks nearly identical to the input except that it displays massive overshoot at each rising or falling edge of the square wave.

(iv)Place the ideal diodes you have made as clamps as is in Figure 2(b) and plot the result on the same plot. Explain the result of this clamping action.

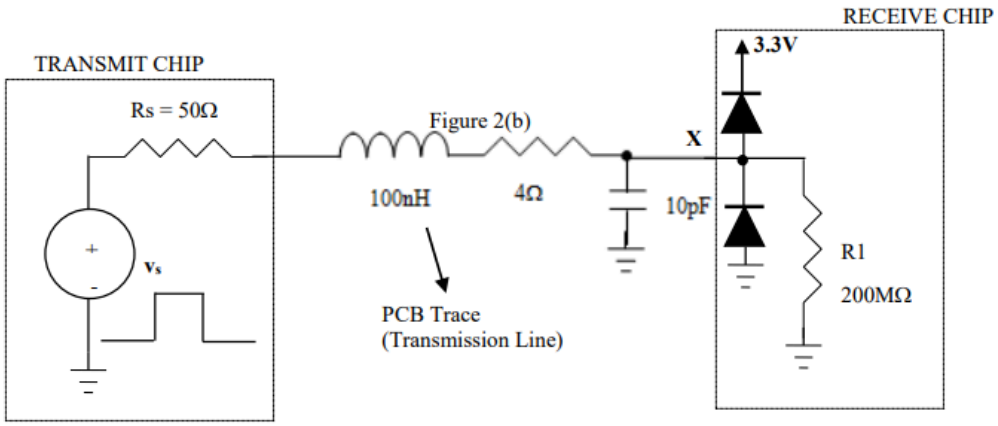

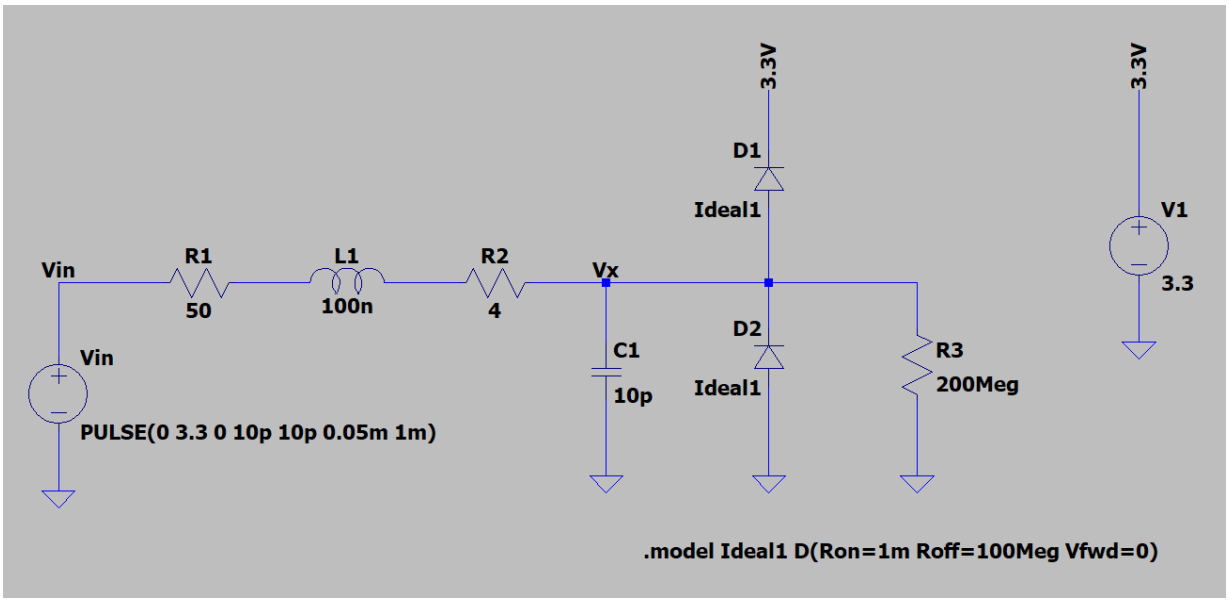

Schematic of our RLC circuit attached to a clamp with ideal diodes.

We no longer have the spikes down or up because when voltage exceeds 3.3 or goes below 0, the current will go through either the diode D1 to 3.3V or the diode D2 to ground. This forces Vx (the output) to stay between 0V and 3.3V.

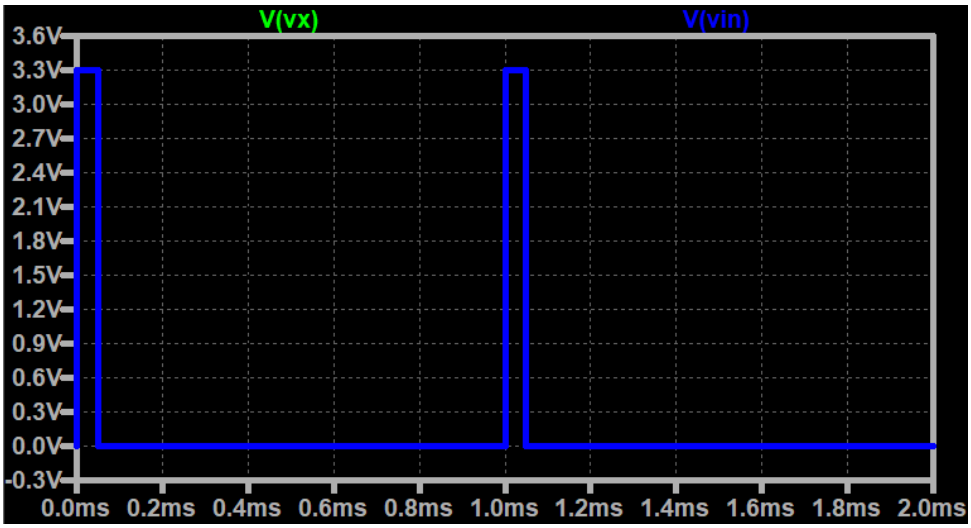

Input and output of the RLC circuit with ideal clamp diodes. Input is green and output is blue.

Given how the ideal diode clamp works, the input and output perfectly overlap as expected. Our ideal diodes are configured in a way that restricts the output between 0V and 3.3V, removing all overshoot in the process.

(v) Replace the ideal diodes by the real diodes (1N4148) from the library and plot the result on the same plot. Explain the result of this clamping action. Is the voltage range of the clamp function appropriate?

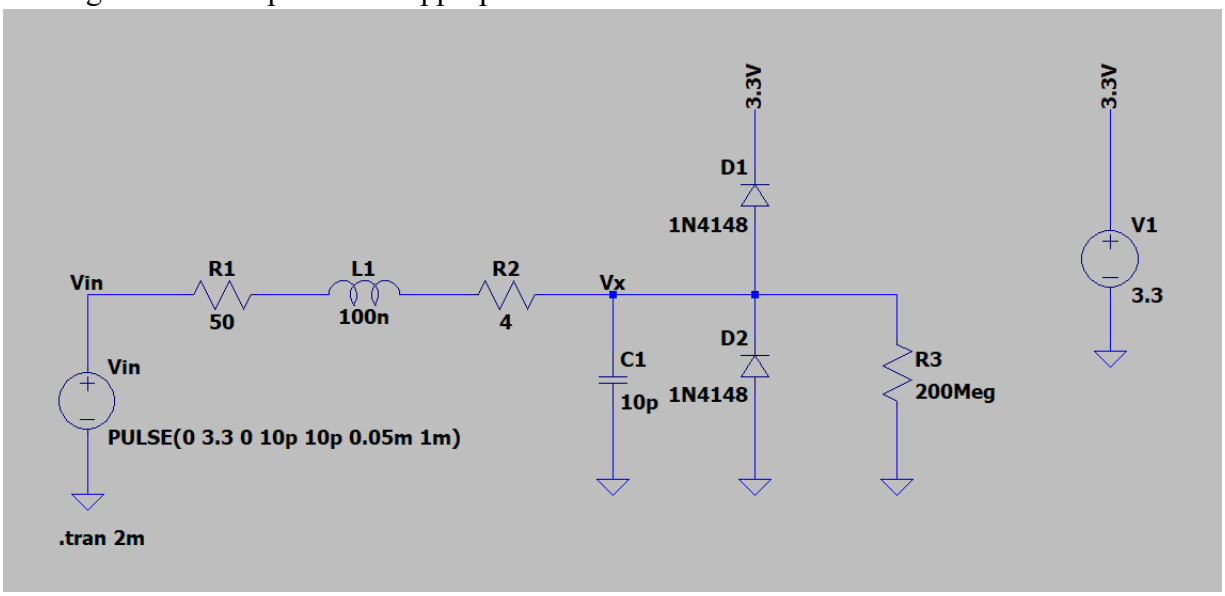

The same schematic as before, but the ideal diodes are replaced with real 1N4148 diodes.

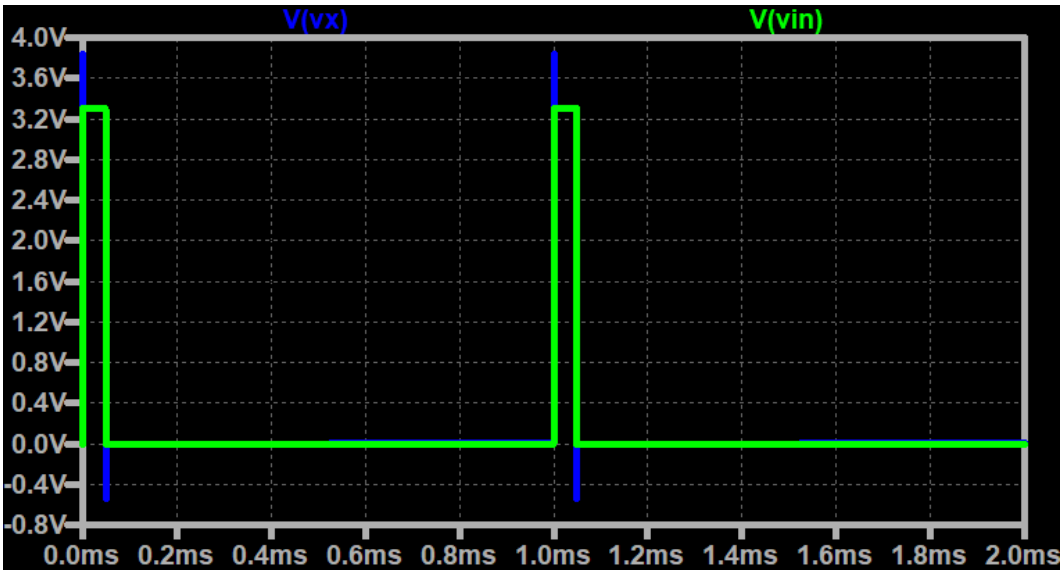

Input and output of the RLC circuit with real clamp diodes. Green is input and blue is output.

The real diodes do make the overshoot much smaller but there is still overshoot unlike with the ideal diodes. The real diodes have a forward drop voltage, which widens the range of allowed values for the output voltage.

(vi) What happens when the diode chosen is non-ideal and has a forward drop voltage? Does that improve the clamp performance?

The forward drop voltage does not improve clamp performance. The inclusion of a forward drop voltage means that the diodes would allow a larger range of voltages than what we want. A higher forward drop voltage means more overshoot is allowed through.

TA Check Point: Complete Part 3 and show your TA that the clamps are functioning correctly.

Section B: Experiments

4) Working with LEDs:

(i) Implement the schematic of Figure 3 using an LED and the resistance value you calculated in the prelab. Connect a DC source of 5V to the circuit.

Measured resistance: 333.7Ω

(ii) Measure the current flowing in the LED and the voltage drop across the LED.

Current flowing through LED: 6.45mA

Voltage drop across LED: 2.78V

(iii) What is the operating point of your LED? Is it similar to the one you found in prelab? Explain why or why not.

The operating point is 2.78V and 6.45mA. This is similar to the datasheet specifications as the graph in the datasheet shows data very similar to ours.

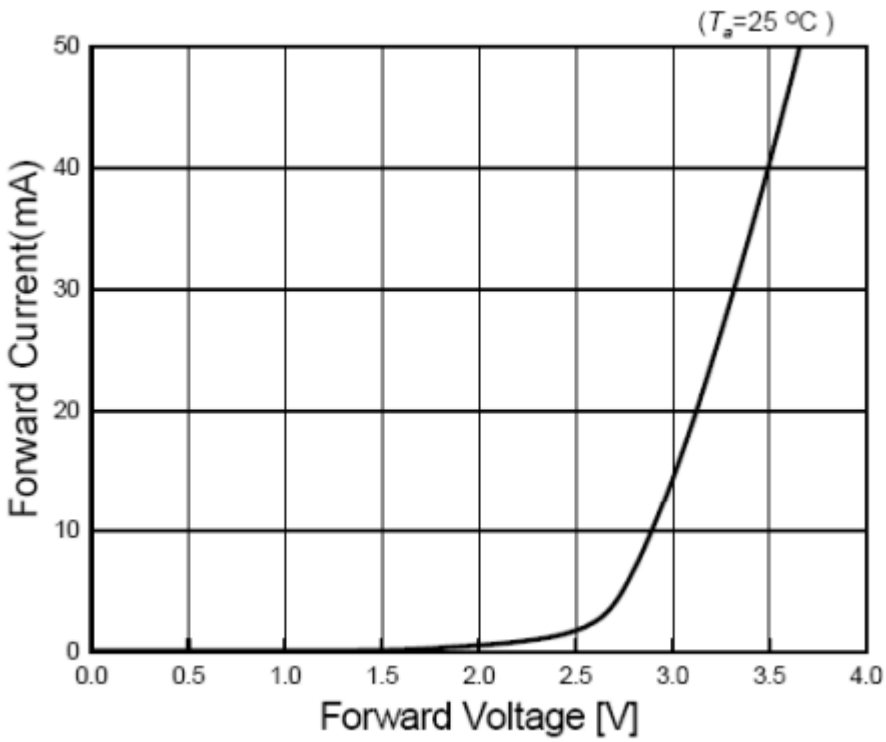

(iv) What is the power dissipated in this circuit? Did you meet the specifications?

V*I=5V*6.45mA = 32.25mW

(v) What is the power dissipated in the LED? Does it meet the ratings?

I*V = 6.45mA*2.78V = 17.9mW; This meets the rating as the power absorbed is below 114mW.

(vi) Decrease the DC voltage source to 4V. What do you notice? Explain your observation.

The LED is not as bright. This is because it receives less power.

Voltage across LED: 2.72V

Current through LED: 3.73mA

Power = V*I = 2.72V * 3.73mA = 10.1mW

Figure 3:

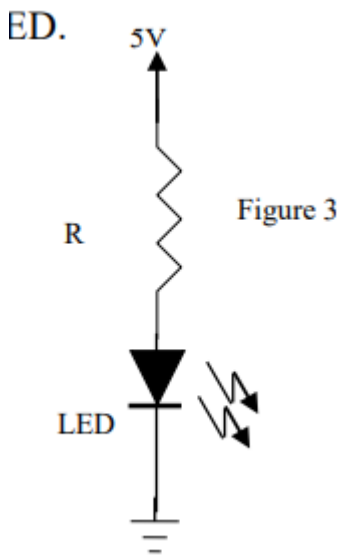

TA Check Point: Complete Part 3 and show your TA t***hat the LED will function correctly.***

5) <u>iv curve of a DIODE:</u>

(i) Use the curve tracer in the lab to plot iv curves of the various diodes given to you.

Since our camera showed the curve tracer's screen flickering, we decided to take multiple pictures of the i-v plot on the curve tracer and include them in this report.

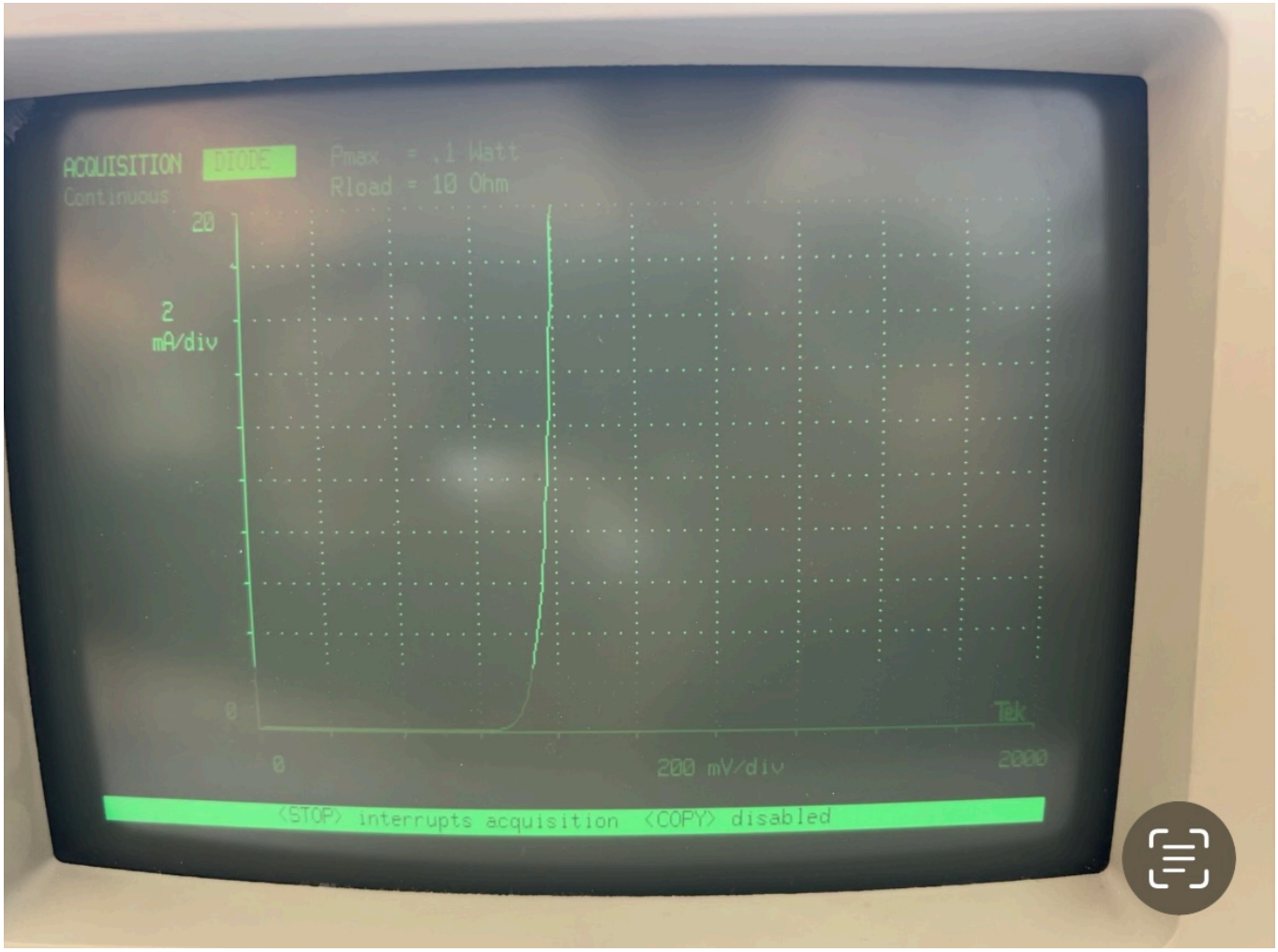

First picture of the i-v curve of the tested diode. The horizontal axis is the diode's voltage and the vertical axis is the diode's current. Each square on the grid is 200mV by 2 mA.

Second picture of the i-v curve of the tested diode. The horizontal axis is the diode's voltage and the vertical axis is the diode's current. Each square on the grid is 200mV by 2 mA.